PERMA PURE LLC
1001 NEW HAMPSHIRE AVE
LAKEWOOD, NEW JERSEY 08701
732.244.0010 800.337.3762 FAX 732.244.8140 INFO@PERMAPURE.COM
A HALMA COMPANY

Perma Pure Mini GASS System Supplemental Quick Start Guide, Operational Parameters, and Notes

- Refer to the Mini GASS User manual for proper operation, as noted below
- Connect to utilities and sample gas stream as described in Mini GASS User Manual.
- Verify that the gas sample line is heated to a minimum of 100 °C and insulated up to the point of entry into the heated enclosure
- ***DO NOT start sample gas flow at this time.*** The Mini GASS must operate for a minimum of 30 minutes ***AFTER*** it has reached the temperature set point to stabilize.

Temperature Controller Operation

1. During initial start-up, the Temperature Controller will automatically ramp up to the 70°C temperature setpoint.
   100°C is the maximum temperature setpoint. The maximum temperature should not be changed.
   Do not allow sample gas to flow into the Mini GASS System until the Mini GASS System has reached the temperature setpoint. Once the temperature reaches the setpoint, the temperature alarm is enabled. A drop in temperature of 5 °C below the setpoint will trigger the temperature alarm.
2. ***If power is lost to the system, verify that the Temperature Controller has reached the setpoint before restarting the sample flow.***
   Since both alarm relays are energized during normal operation, both alarm outputs will trigger during a power failure.
   It is recommended that if a Programmable Logic Controller (PLC) is connected to the Mini GASS system and used to control a sample pump, the alarm outputs should be latched to prevent the sample flow from starting immediately after the power is restored. It must be confirmed that the system has come back up to operating temperature before the sample pump is manually restarted.
   Failure to prevent sample flow with the Mini GASS system in a previously alarmed state could cause permanent damage to the PD Nafion™ Dryer.

PERMA PURE LLC
1001 NEW HAMPSHIRE AVE
LAKEWOOD, NEW JERSEY 08701
732.244.0010 800.337.3762 FAX 732.244.8140 INFO@PERMAPURE.COM
A HALMA COMPANY

Set compressed air pressure settings and flow settings

1. Set compressed air pressure via the right compressed air regulator to 15PSIG
2. Set the compressed air Purge Gas Flow rate to 20 LPM as the initial setting
3. Set the Purge Eductor setting using the left compressed air pressure regulator to read 5-10 InHg on the Purge Eductor Vacuum gauge.

Note: The Purge Gas Flow Rate is affected by the Purge Eductor pressure. It is likely that they will both have to be adjusted to get them to the specified settings.

Monitor Temperature Controller

1. Allow the Mini GASS to reach the set point temperature
2. Monitor the sample line that connects to the entrance of the PD Nafion™ Dryer in the heated enclosure. Verify that there are no droplets forming. If droplets are present, increase the temperature in 5 °C increments until the droplets are no longer present.
3. ***Wait an additional half hour for the Mini GASS temperature to stabilize and heat all of the components in the heated enclosure to the set point.***

Sample Gas Flow

1. When the sample gas flow has started, it is a normal situation to see the Temperature Controller's displayed temperature increase or decrease. This is primarily due to the sample gas having been flowing through a heated sample line, causing the sample gas to pick up some of this heat. The sample gas entering the system should always be non-condensing, with its temperature ideally 10 °C above the dew point temperature of the gas.
2. Monitor the sample line that connects to the entrance of the PD Nafion™ Dryer in the heated enclosure. Verify that there are no droplets forming. If droplets are present, increase the temperature in 5 °C increments until the droplets are no longer present.
3. If adjustments were made in step 2, wait a half hour for the temperature to stabilize.
4. Set the purge gas flow to 2.5-3 times the sample gas flow. If the sample gas contains concentrations of acids, set the flow to 10 times the sample flow.
5. Reset the purge eductor setting regulator to maintain 5-10 InHg of vacuum on the gauge.
6. Verify that the incoming air pressure gauge is still set to 15PSIG.
7. Repeat steps 4, 5, 6 until the target settings are reached

IF THE SYSTEM HAS BLOWN TWO FUSES IN A ROW, PLEASE CONTACT US OR YOUR LOCAL TECHNICIAN FOR REPAIRS.

IF YOU REQUIRE ADDITIONAL MINI-GASS INFORMATION, PLEASE CLICK HERE.

PERMA PURE LLC
1001 NEW HAMPSHIRE AVE
LAKEWOOD, NEW JERSEY 08701
732.244.0010 800.337.3762 FAX 732.244.8140 INFO@PERMAPURE.COM
A HALMA COMPANY

Other Tips and Miscellaneous Info

COALESCING FILTER ELEMENT REPLACEMENT

1. Loosen the bolt on the bottom of the filter.
2. Gently pull apart the assembly and remove the old element.
3. Place the new element into the grooves in the top and bottom of the housing.
4. When re-assembling, inspect for O-rings on top and bottom caps and on the center bolt.
5. Install the glass shell onto the bottom piece.
6. Place the new element in the groove in the bottom piece. Be sure that the element is seated correctly and parallel to the glass shell.
7. Carefully mate the bottom assembly onto the top piece. A slight twisting motion may be required to allow the shell to slip over the O-ring seal.
8. Visually make sure the element is seated correctly in the top groove.
9. Replace the bolt through the hole in the bottom piece and screw clockwise into the top piece. Do not over-tighten the center bolt. It should be just tight enough so it does not vibrate loose. Over-tightening will not help the filter to seal.



PERMA PURE LLC
1001 NEW HAMPSHIRE AVE
LAKEWOOD, NEW JERSEY 08701
732.244.0010 800.337.3762 FAX 732.244.8140 INFO@PERMAPURE.COM
A HALMA COMPANY

PD Disassembly

Tools Needed: Phillips head screwdriver, unsharpened pencil with eraser

1. Loosen locking screws on both ends of the dryer.
2. Insert the eraser end of the pencil into one sample port until it rests on the tube header face.
3. Hold the dryer vertically and place the other end of the pencil down onto a hard, slip-resistant surface.
4. While supporting the shell tube, push the lower end fitting down with consistent pressure until it slips off the shell tube. **Do not attempt to pull the fitting from the shell tube; doing this is likely to damage the dryer element tubing.**
5. Repeat steps 2-4 on the other end.
6. While avoiding excessive sideward force of the element on the shell tube, carefully remove one O-ring from the tube header.
7. Gently pull the tube element from the opposite end of the dryer.

PD Assembly

Tools Needed: Phillips head screwdriver

1. Install one O-ring in the groove in one tube Header.
2. Slip the opposite tube header through the dryer shell.
3. Install the other O-ring
4. Push one O-ring into the groove inside the coupling
5. Firmly push the coupling over the tube header. A rocking motion will help the O-rings slide past each other.
6. Align the purge port with a hole in the shell tube
7. While being sure that the screw goes into the hole in the shell tube, tighten the locking screw on the opposite side of the coupling until the underside of the screw head contacts the top of the boss.
8. Repeat steps 4-7 for the opposite end.

PARTS LIST		
ITEM	QUANTITY	DESCRIPTION
1	2	SCREW, 10-24 x 3/8" SS
2	2	COUPLING
3	2	ELEMENT HEADER SEAL, VITON
4	2	SHELL TUBE SEAL, VITON
5	1	DRYER ELEMENT
6	1	SHELL TUBE

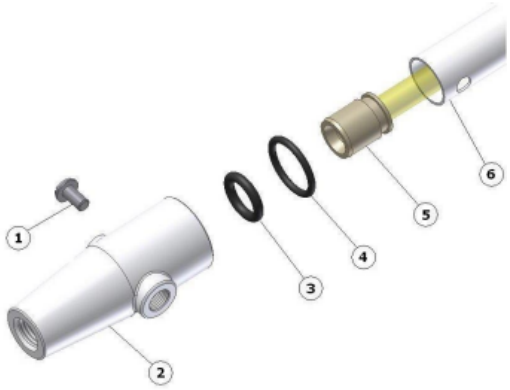

PERMA PURE LLC
1001 NEW HAMPSHIRE AVE
LAKEWOOD, NEW JERSEY 08701
732.244.0010 800.337.3762 FAX 732.244.8140 INFO@PERMAPURE.COM
A HALMA COMPANY

Ammonia Scrubber Media Replacement

When deposits are visible on 75% of the scrubber, the scrubbing media needs to be replaced.

1. Unscrew thumbscrew on bottom of housing.
2. Swing the yoke to one side.
3. Separate the housing and bottom cap as an assembly from the top cap.
4. Remove spring and top screen.
5. Remove old media and dispose of properly (rinse housing with soapy water to clean).
6. Fill housing with 135cc of Berl Saddles (tap housing to allow material to settle).
7. Pour 65cc of Scrubbing Media (tap housing to allow material to settle).
8. Replace the stainless steel screen on top of the media.
9. Replace the spring on top of the screen.
10. Clean O-rings on the shell and inside top manifold (replace if necessary).
11. Place the center tube into the O-ring seal in the top cap.
12. Push and twist to seal housing around O-ring.
13. Replace yoke and finger-tighten thumbscrew (do not overtighten).

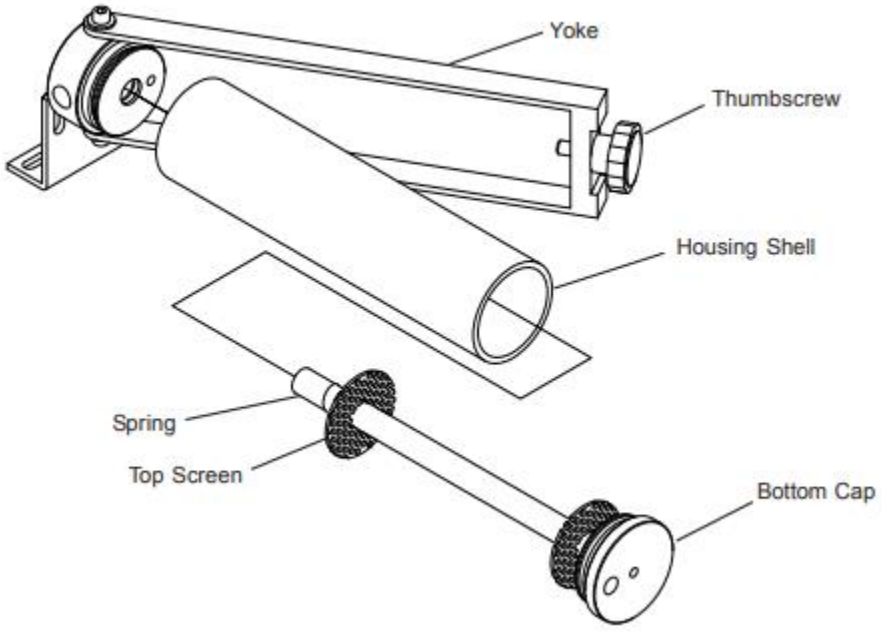

PERMA PURE LLC
1001 NEW HAMPSHIRE AVE
LAKEWOOD, NEW JERSEY 08701
732.244.0010 800.337.3762 FAX 732.244.8140 INFO@PERMAPURE.COM
A HALMA COMPANY

Z-Purge Information

With the inert gas supply connected, the enclosure power is de-energized and the alarm system (if utilized).

Follow the steps to purge the system:

1. Carefully read the Start-Up Instruction Nameplate on the system.
2. Check operation of the Enclosure Protection Vent (EPV-1, if utilized), opening it manually several times (see helpful hints below)
3. Seal protected enclosures.
4. Open Enclosure Pressure Control Regulator, but turning CW, to set Enclosure Pressure Indicator at "Safe" pressure.
5. Ensure the Protection System Enclosure Pressure Indicator maintains a "Safe" pressure for one minute.
6. Standby for exchange time as specified on the Instruction Nameplate, then energize the protected enclosure power.
7. Ensure the Enclosure Pressure Indicator maintains a "Safe" pressure before leaving the system unattended.

Z-Purge Troubleshooting

Problem	Causes	Solution
The enclosure pressure control regulator will not hold a safe pressure.	Leakage around gasketing, covers, seams, piping and tubing connections, conduit connections, and electrical conduit seal of the enclosure.	Tighten enclosure latches: silicone sealant can be applied from inside the protected enclosure where tightening is not feasible.
Enclosure pressure indicator reading is difficult to stabilize.	In a sufficient enclosure, the leakage or opening of the venturi orifice is crimped too small.	Remove the orifice, cut off the crimped end, and ream the tube, then re-crimp and reinstall the tube. As the tube is shortened, sensitivity decreases, allowing easier setpoint on the enclosure.
Enclosure pressure Indicator "Drifts" up or down from the "Safe" pressure setting.	Application involves a small, tightly sealed enclosure and/or a fluctuating protective gas supply.	Pre-regulate gas supply upstream of the enclosure protection system to 5 psi maximum.
The enclosure pressure loss alarm switch does not appear to be operating.	The pressure switch is out of calibration.	Calibrate by slowly adjusting counterclockwise to decrease the setpoint and clockwise to increase the setpoint.

PERMA PURE LLC
1001 NEW HAMPSHIRE AVE
LAKEWOOD, NEW JERSEY 08701
732.244.0010 800.337.3762 FAX 732.244.8140 INFO@PERMAPURE.COM

A HALMA COMPANY

CAL 3300 Electronic Temperature Controller

Setpoint Adjustment

1. Press and hold the "*" key on the CAL 3300 temperature controller.
2. Press either the up or down key to adjust the setpoint. Setpoint temperature will change by one °C with each press of the arrow key. Holding the key will cause the setpoint to change rapidly.
3. When the desired temperature setpoint is reached, release both keys.